Flor Patchwork PPP

by

Alex Balanzario

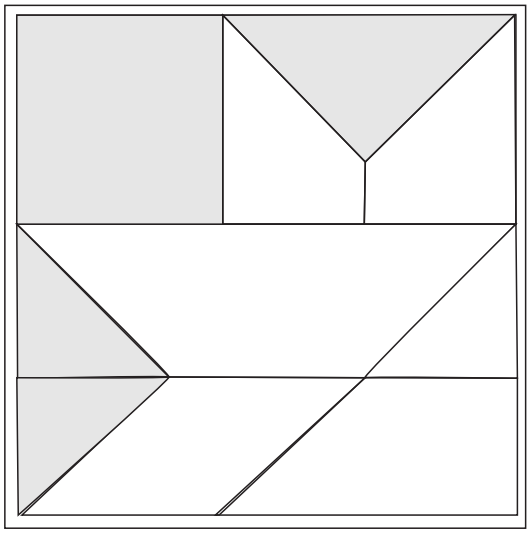

Notas

https://alecoseycose.com

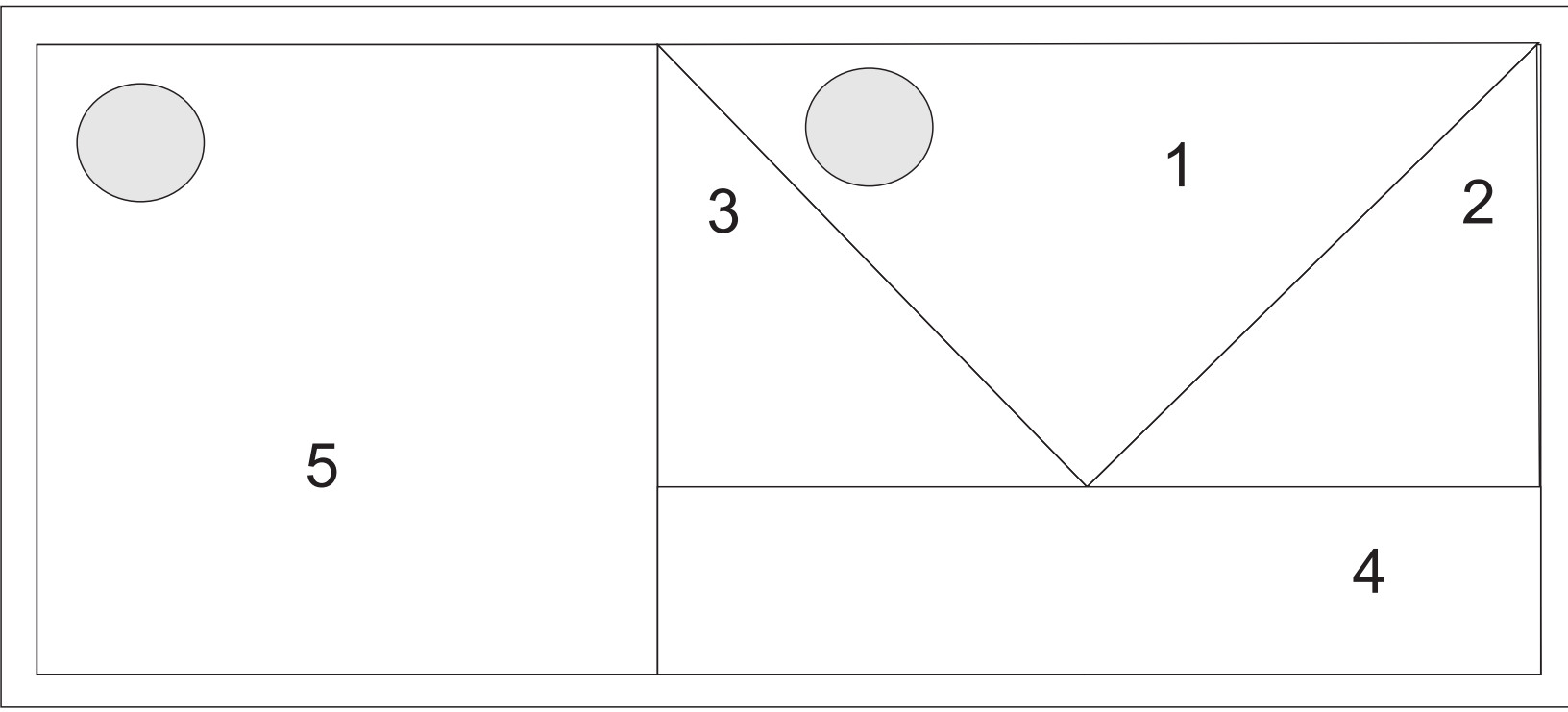
5
3
1
2
4

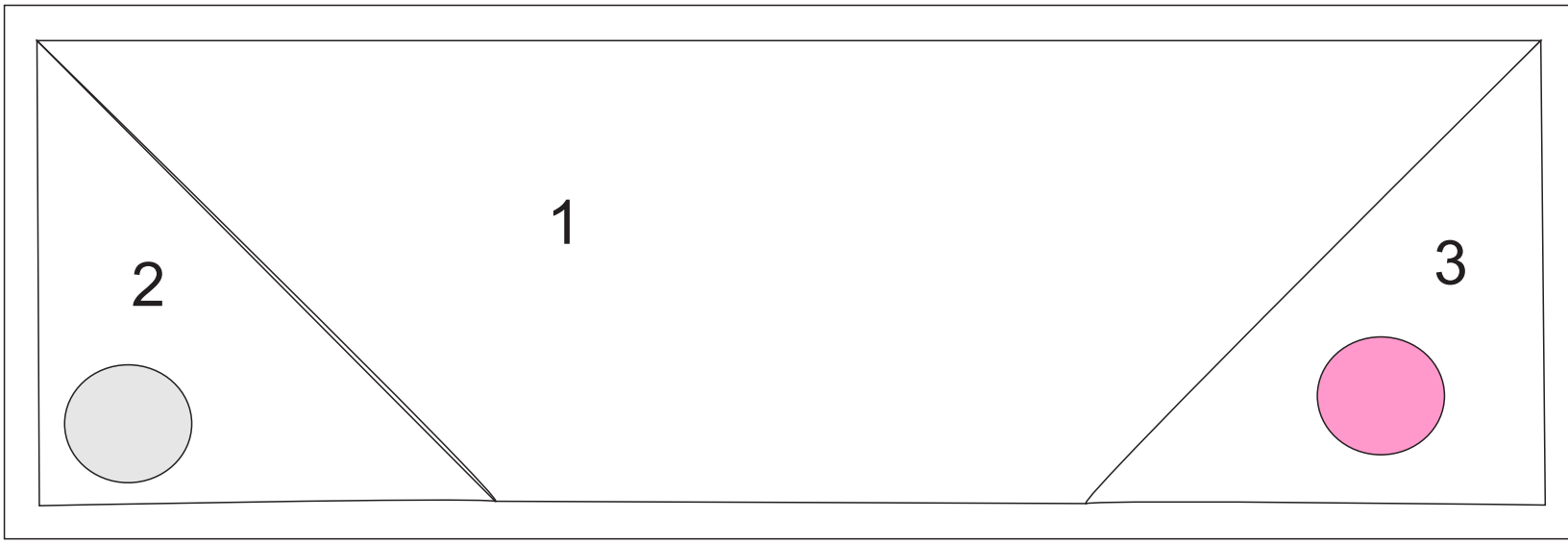
2
1
3

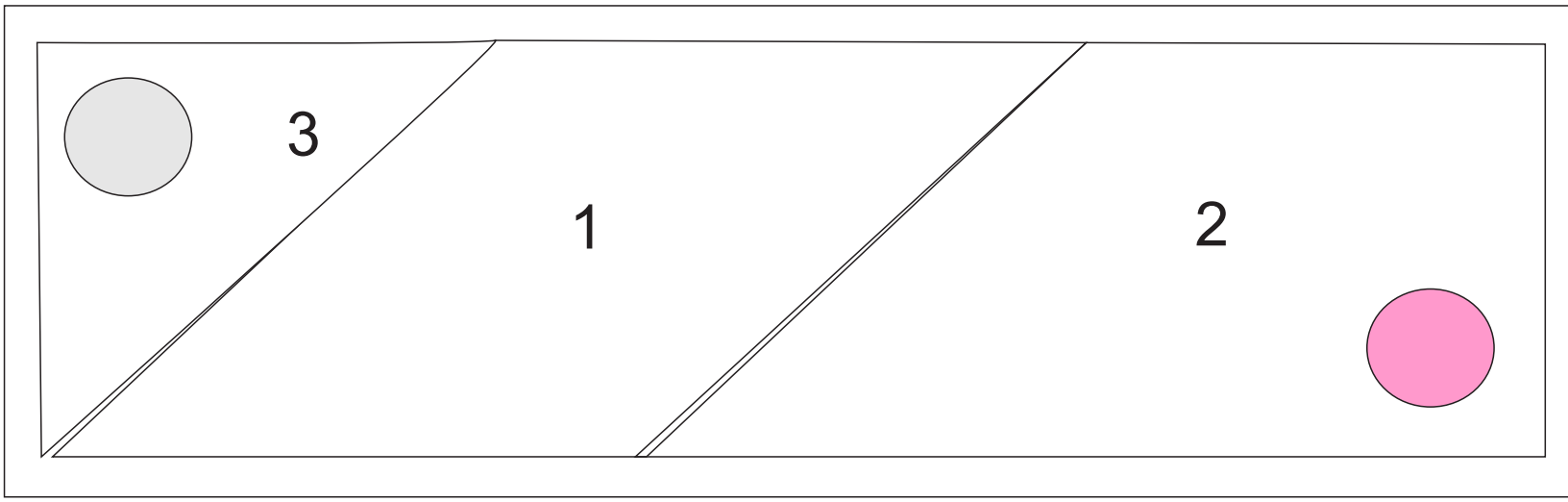
3
1
2